$^{199}_{82}$Pb (Continued)
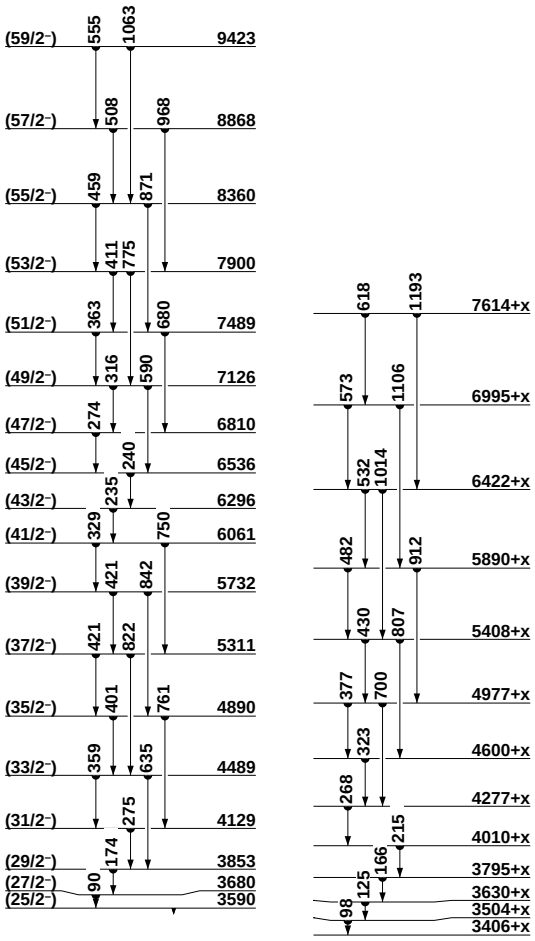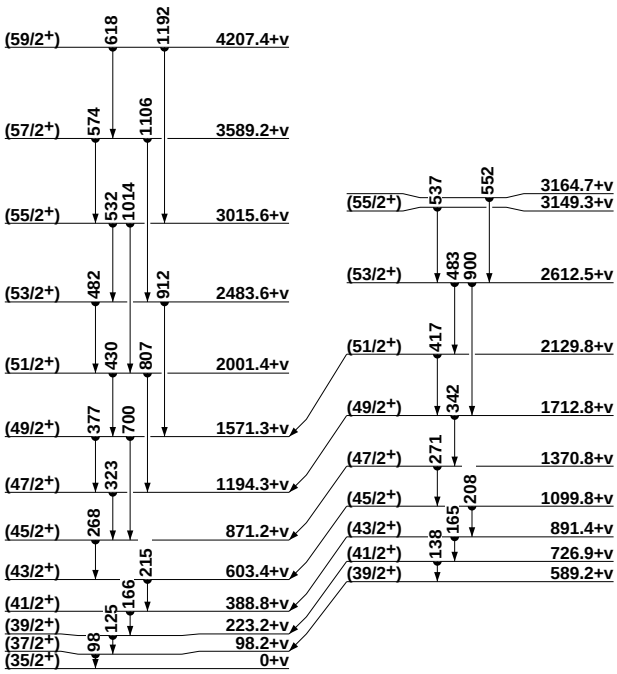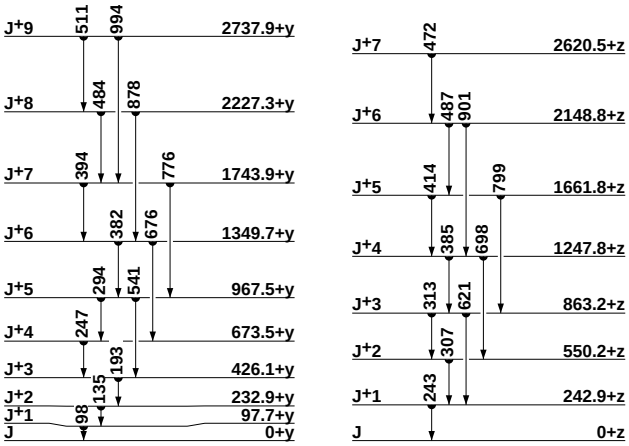
5501, *[F]* γ_{5321}***180.5*** (†$_\gamma$100)
5560, *[F]* γ_{4480}***1079.5*** (†$_\gamma$100)
5732 *5*, (39/2$^-$), *[F]* γ_{5311}***421.4*** (M1) γ_{4890}***842.4*** (E2)
6061 *5*, (41/2$^-$), *[F]* γ_{5732}***328.6*** (M1) γ_{5311}***750.1*** (E2)
6296 *5*, (43/2$^-$), *[F]* γ_{6061}***234.5*** (†$_\gamma$100) (M1)
6536 *5*, (45/2$^-$), *[F]* γ_{6296}***240.1*** (†$_\gamma$100) (M1)
6810 *5*, (47/2$^-$), *[F]* γ_{6536}***273.8*** (†$_\gamma$100) (M1)
6993, *[F]* γ_{5560}***1432.5*** (†$_\gamma$100)
7126 *5*, (49/2$^-$), *[F]* γ_{6810}***316.3*** (M1) γ_{6536}***590.1*** (E2)
7489 *5*, (51/2$^-$), *[F]* γ_{7126}***363.2*** (M1) γ_{6810}***679.5*** (E2)
7900 *5*, (53/2$^-$), *[F]* γ_{7489}***411.3*** (M1) γ_{7126}***774.6*** (E2)
8360 *5*, (55/2$^-$), *[F]* γ_{7900}***459.3*** (M1) γ_{7489}***870.8*** (E2)
8868 *5*, (57/2$^-$), *[F]* γ_{8360}***508.3*** (M1) γ_{7900}***967.5*** (E2)
3406+x *5*, *[F]*
3504+x *5*, *[F]* γ_{3406+x}***98.35*** *21* (†$_\gamma$100) (M1)
3630+x *5*, *[F]* γ_{3504+x}***125.05*** *21* (†$_\gamma$100) (M1)
3795+x *5*, *[F]* γ_{3630+x}***165.55*** *21* (†$_\gamma$100) (M1)
4010+x *5*, *[F]* γ_{3795+x}***214.60*** *21* (†$_\gamma$100) (M1)
4277+x *5*, *[F]* γ_{4010+x}***267.70*** *21* (†$_\gamma$100) (M1)
4600+x *5*, *[F]* γ_{4277+x}***323.05*** *21* (†$_\gamma$100) (M1)
4977+x *5*, *[F]* γ_{4600+x}***377.10*** *21* (†$_\gamma$100) (M1) γ_{4277+x}***700.10*** *21* (†$_\gamma$13 *4*) (E2)
5408+x *5*, *[F]* γ_{4977+x}***430.30*** *21* (†$_\gamma$100) (M1) γ_{4600+x}***807.30*** *21* (†$_\gamma$16 *9*) (E2)
5890+x *5*, *[F]* γ_{5408+x}***482.05*** *21* (†$_\gamma$100) (M1) γ_{4977+x}***912.45*** *21* (†$_\gamma$13 *5*) (E2)
6422+x *5*, *[F]* γ_{5890+x}***531.95*** *21* (†$_\gamma$100) (M1) γ_{5408+x}***1014.00*** *21* (†$_\gamma$6.1 *19*) (E2)
6995+x *5*, *[F]* γ_{6422+x}***573.45*** *21* (†$_\gamma$100) (M1) γ_{5890+x}***1105.55*** *21* (†$_\gamma$5.6 *16*) (E2)
7614+x *5*, *[F]* γ_{6995+x}***618.35*** *21* (†$_\gamma$100) (M1) γ_{6422+x}***1192.95*** *21* (†$_\gamma$6.3 *16*) (E2)
9423, (59/2$^-$), *[F]* γ_{8868}***554.8*** (†$_\gamma$100 *67*) γ_{8360}***1063.2***
0+v, (35/2$^+$), *[F]*
98.2+v, (37/2$^+$), *[F]* γ_{0+v}***98.2*** (†$_\gamma$100)
223.2+v, (39/2$^+$), *[F]* γ_{98+v}***125.0*** (†$_\gamma$100)
388.8+v, (41/2$^+$), *[F]* γ_{223+v}***165.6*** (†$_\gamma$100)
589.2+v, (39/2$^+$), *[F]* γ_{98+v}***491.0*** (†$_\gamma$100)
603.4+v, (43/2$^+$), *[F]* γ_{389+v}***214.6*** (†$_\gamma$100)
726.9+v, (41/2$^+$), *[F]* γ_{589+v}***137.7*** (†$_\gamma$100 *29*) γ_{223+v}***503.7*** (†$_\gamma$2.9 *9*)
871.2+v, (45/2$^+$), *[F]* γ_{603+v}***267.8*** (†$_\gamma$100)
891.4+v, (43/2$^+$), *[F]* γ_{727+v}***164.6*** (†$_\gamma$100 *29*) γ_{389+v}***502.6*** (†$_\gamma$2.9 *5*)
1099.8+v, (45/2$^+$), *[F]* γ_{891+v}***208.3*** (†$_\gamma$100 *25*) γ_{603+v}***496.5*** (†$_\gamma$1.8 *4*)
1194.3+v, (47/2$^+$), *[F]* γ_{871+v}***323.1*** (†$_\gamma$100)
1370.8+v, (47/2$^+$), *[F]* γ_{1100+v}***271.0*** (†$_\gamma$100 *20*) γ_{871+v}***499.6*** (†$_\gamma$1.6 *3*)
1571.3+v, (49/2$^+$), *[F]* γ_{1194+v}***377.1*** (†$_\gamma$100 *16*) γ_{871+v}***700.1*** (†$_\gamma$4.0 *14*)
1712.8+v, (49/2$^+$), *[F]* γ_{1371+v}***342.0*** (†$_\gamma$100 *8*) γ_{1194+v}***518.5*** (†$_\gamma$1.7 *3*)
2001.4+v, (51/2$^+$), *[F]* γ_{1571+v}***430.3*** (†$_\gamma$100 *15*) γ_{1194+v}***807.1*** (†$_\gamma$6.5 *22*)