$^{198}_{82}$Pb (Continued)

114.1+w *3*, J+1, *[C]* γ_{0+w}***114.1*** *3* (†$_\gamma$100)
270.0+w *5*, J+2, *[C]* γ_{114+w}***155.9*** *3* (†$_\gamma$100) (M1)
485.8+w *5*, J+3, *[C]* γ_{270+w}***215.8*** *2* (†$_\gamma$100) M1
769.6+w *5*, J+4, *[C]* γ_{486+w}***283.8*** *2* (†$_\gamma$100) M1
1113.9+w *6*, J+5, *[C]* γ_{770+w}***344.3*** *2* (†$_\gamma$100) M1
1533.1+w *6*, J+6, *[C]* γ_{1114+w}***419.2*** *2* (†$_\gamma$100) (M1)
2010.3+w *7*, J+7, *[C]* γ_{1533+w}***477.2*** *2* (†$_\gamma$100) M1
γ_{1114+w}***896***(?)
2495.1+w *7*, J+8, *[C]* γ_{2010+w}***484.8*** *2* (†$_\gamma$100) M1
0+x, J=(12,13,14), *[C]*
1258.71+x *20*, J+1, *[C]* γ_{0+x}***1258.7*** *2* (†$_\gamma$100) M1
1580.5+x *3*, J+2, *[C]* γ_{1259+x}***321.8*** *2* (†$_\gamma$100) M1
1813.6+x *4*, J+3, *[C]* γ_{1581+x}***233.6*** *2* (†$_\gamma$100) M1
2345.1+x *4*, J+4, *[C]* γ_{1814+x}***531.5*** *2* (†$_\gamma$35 *5*) M1
γ_{1581+x}***764.1*** *2* (†$_\gamma$100 *5*) E2
2610.2+x *4*, J+5, *[C]* γ_{2345+x}***264.6*** *2* (†$_\gamma$100 *12*)
γ_{1814+x}***796.9*** *2* (†$_\gamma$27 *8*)
3152.5+x *4*, J+6, *[C]* γ_{2610+x}***542.7*** *2* (†$_\gamma$38 *5*) M1
γ_{2345+x}***807.1*** *2* (†$_\gamma$100 *5*) E2
0+z, (18$^-$), *[C]*
113.90+z *20*, (19$^-$), *[C]* γ_{0+z}***113.9*** *2* (†$_\gamma$100) (M1)
269.9+z *3*, (20$^-$), *[C]* γ_{114+z}***156.0*** *2* (†$_\gamma$100) M1
485.2+z *4*, (21$^-$), *[C]* γ_{270+z}***215.3*** *2* (†$_\gamma$100) M1
763.9+z *4*, (22$^-$), *[C]* γ_{485+z}***278.7*** *2* (†$_\gamma$100) (M1)
1106.7+z *5*, (23$^-$), 1.12 *39* ps, *[C]* γ_{764+z}***342.8*** *2* (†$_\gamma$100) M1 γ_{485+z}***622***
1496.2+z *5*, (24$^-$), 0.64 *15* ps, *[C]* γ_{1107+z}***389.5*** *2* (†$_\gamma$100) M1 γ_{764+z}***732***
1919.3+z *6*, (25$^-$), 0.41 *16* ps, *[C]* γ_{1496+z}***423.1*** *2* (†$_\gamma$100) M1 γ_{1107+z}***812***
2363.9+z *6*, (26$^-$), 0.19 *7* ps, *[C]* γ_{1919+z}***444.6*** *2* (†$_\gamma$100) M1 γ_{1496+z}***867***
2835.6+z *6*, (27$^-$), 0.29 *10* ps, *[C]* γ_{2364+z}***471.7*** *2* (†$_\gamma$100) M1 γ_{1919+z}***917***
3311.8+z *7*, (28$^-$), 0.31 *11* ps, *[C]* γ_{2836+z}***476.2*** *2* (†$_\gamma$100) M1 γ_{2364+z}***948***
3840.8+z *8*, (29$^-$), *[C]* γ_{3312+z}***529.0*** *5* (†$_\gamma$100)
0+y, J, *[C]*
123.4+y *3*, J+1, *[C]* γ_{0+y}***123.4*** *3* (†$_\gamma$100)
283.2+y *5*, J+2, *[C]* γ_{123+y}***159.8*** *3* (†$_\gamma$100) M1
487.6+y *5*, J+3, *[C]* γ_{283+y}***204.4*** *2* (†$_\gamma$100) M1
752.5+y *5*, J+4, *[C]* γ_{488+y}***264.9*** *2* (†$_\gamma$100) M1
1090.3+y *6*, J+5, *[C]* γ_{753+y}***337.8*** *2* (†$_\gamma$100) M1
1499.4+y *6*, J+6, *[C]* γ_{1090+y}***409.1*** *2* (†$_\gamma$100) M1
1952.4+y *8*, J+7, *[C]* γ_{1499+y}***453.0*** *5* (†$_\gamma$100)
2447.4+y *13*(?), J+8, *[C]* γ_{1952+y}***495*** (†$_\gamma$100)
u(?), J≈12, *[D]*
303.8+u *4*(?), J+2, *[D]* γ_0***303.8*** *4*(?) (†$_\gamma$100)
$I^{(1)}$=*88.9*, $I^{(2)}$=*90.3*, ħω=*0.163*
651.9+u *7*(?), J+4, *[D]* γ_{304+u}***348.1*** *5*(?) (†$_\gamma$100)
$I^{(1)}$=*89.1*, $I^{(2)}$=*93.9*, ħω=*0.185*
1042.6+u *8*(?), J+6, *[D]* γ_{652+u}***390.7*** *4*(?) (†$_\gamma$100)
$I^{(1)}$=*89.6*, $I^{(2)}$=*96.6*, ħω=*0.206*
1474.7+u *9*(?), J+8, *[D]* γ_{1043+u}***432.1*** *5*(?) (†$_\gamma$100)
$I^{(1)}$=*90.3*, $I^{(2)}$=*95.9*, ħω=*0.226*
1948.5+u *11*(?), J+10, *[D]* γ_{1475+u}***473.8*** *5*(?) (†$_\gamma$100) $I^{(1)}$=*90.8*, $I^{(2)}$=*101.8*, ħω=*0.247*
2461.6+u *13*(?), J+12, *[D]* γ_{1949+u}***513.1*** *7*(?) (†$_\gamma$100) $I^{(1)}$=*91.6*, $I^{(2)}$=*99.3*, ħω=*0.267*
3015.0+u *15*(?), J+14, *[D]* γ_{2462+u}***553.4*** *7*(?) (†$_\gamma$100) $I^{(1)}$=*92.2*

γ(*^{198}Tl*) from ^{198}Pb (2.40 h) EC+β$^+$ decay
< *for Iγ% multiply by 0.18 3* **>**
30.8 *1* (†$_\gamma$0.42 *10*) M1, ***107.3*** (†$_\gamma$0.04), ***116.9*** *1* (†$_\gamma$6.5 *10*) M1, ***122.6*** *1* (†$_\gamma$0.63 *10*) M1, ***138.3*** (†$_\gamma$0.8), ***173.4*** *1* (†$_\gamma$100) E2, ***216.5*** (†$_\gamma$0.23), ***259.5*** *1* (†$_\gamma$32 *4*) M1, ***266.7*** *1* (†$_\gamma$4.8) (M1+E2): δ≈5.0, ***275.4*** (†$_\gamma$1.5 *3*), ***290.3*** *1* (†$_\gamma$200 *30*) M1+E2: δ=2.2$^{+8}_{-4}$, ***365.4*** *1* (†$_\gamma$107 *17*) M1, ***382.0*** *1* (†$_\gamma$31 *4*) M1(+E2): δ=1.20$^{+31}_{-24}$, ***389.5*** *2* (†$_\gamma$3 *1*) M1+E2: δ=1.4$^{+14}_{-5}$, ***396.5*** (†$_\gamma$1.2 *2*), ***397.7*** *1* (†$_\gamma$16 *3*) M1(+E2): δ=0.8$^{+5}_{-4}$, ***467.8*** *2* (†$_\gamma$4 *1*) (M1), ***575.0*** *1* (†$_\gamma$17 *2*) M1, ***605.9*** *4* (†$_\gamma$3.1 *15*), ***649.0*** *1* (†$_\gamma$10 *1*) M1, ***743.0*** *3* (†$_\gamma$8.1 *15*) M1, ***865.3*** *1* (†$_\gamma$33 *3*) M1(+E2): δ=0.8^{+3}.

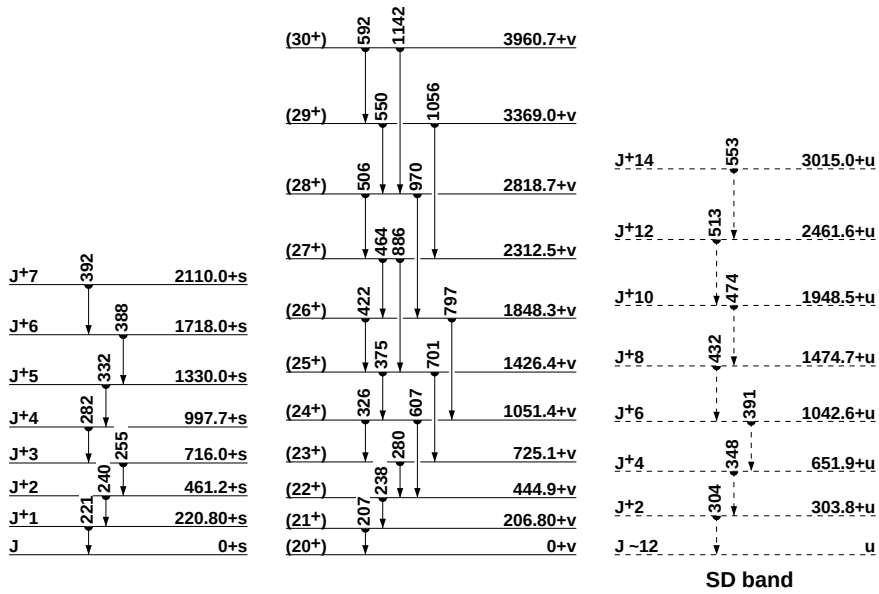

$^{198}_{82}$Pb

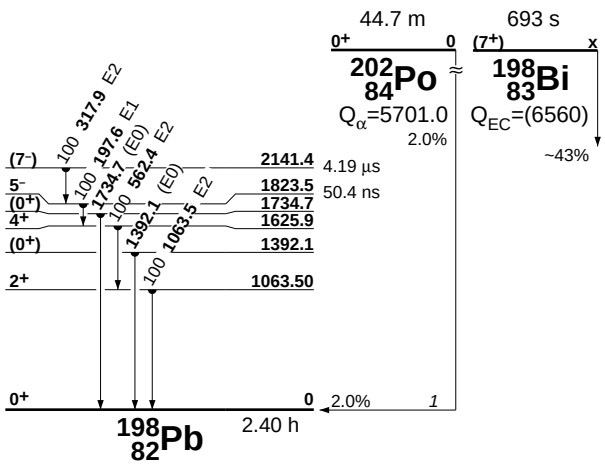

$^{198}_{83}$Bi

Δ: −19540 *140* **S$_n$**: 7990 *160* **S$_p$**: (2030) **Q$_{EC}$**: (6560) **Q$_\alpha$**: (5000)

Populating Reactions and Decay Modes

A ^{198}Bi IT decay (7.7 s) (72Ha73, 74HaWH, 77Ha26)
B ^{202}At α decay (184 s) (61La02, 63Ho18, 67Tr06, 74Ho27, 75BaYJ, 79Ry03, 92Hu04)
C ^{202}At α decay (182 s)
D ^{202}At α decay (0.46 s) (92Hu04)
E ^{198}Po EC decay

Levels and γ-ray branchings:

0, (2$^+$,3$^+$), 618 *20* s, *[ABD]*, %EC+%β$^+$=100
x, (7$^+$), 693 *18* s, *[ACD]*, %EC+%β$^+$=100
164, *[B]* γ_0***164*** (†$_\gamma$100)
248.5+x *5*, (10$^-$), 7.7 *5* s, *[AD]*, %IT=100 γ_x***248.5*** *5* (†$_\gamma$100) E3
303, *[B]* γ_{164}***139*** (†$_\gamma$100)

γ from ^{198}Bi (7.7 s) IT decay **<** *for Iγ% multiply by 1.0* **>**
248.5 *5* (†$_\gamma$39 *1*) E3.

γ(*^{198}Pb*) from ^{198}Bi (693 s) EC+β$^+$ decay:
138.1(u) (†$_\gamma$2.3) M1(+E2): δ=0.78$^{+90}_{-63}$, ***157.5***(u) (†$_\gamma$<0.9), ***197.6*** (†$_\gamma$80) E1, ***247.6***(u) (†$_\gamma$2.2), ***317.85*** (†$_\gamma$37.5) E2, ***434.3***(u) (†$_\gamma$7.3) M1(+E2): δ=0.21$^{+64}_{-21}$, ***546.5***(u) (†$_\gamma$2.7) M1, ***562.4*** (†$_\gamma$79) E2, ***917.3***(u) (†$_\gamma$5.5), ***1063.45*** (†$_\gamma$100) E2, ***1392.1*** (E0), ***1734.7*** (E0).