$^{184}_{76}$Os (Continued)

1225.04 *12*, 4$^+$, *[ACDEGI]* γ_{943}***282.27*** *9* (†$_\gamma$2.31 *18*) γ_{384}***841.28*** *7* (†$_\gamma$100 *5*) E2 γ_{120}***1105.24*** *9* (†$_\gamma$76 *5*) E2

1274.86 *19*, 8$^+$, *[ACDEFGHI]* γ_{774}***500.71*** *14* (†$_\gamma$100) E2

1406.7 *2*, *[C]* γ_{774}***632.8*** *2* γ_{384}***1024.0*** *5*

1428.30 *12*, (5)$^+$, *[ACDEG]* γ_{1081}***347.28*** *9* (†$_\gamma$5.1 *4*) γ_{774}***654.15*** *9* (†$_\gamma$13.8 *10*) γ_{384}***1044.53*** *8* (†$_\gamma$100 *8*) E2

1445.72 *11*, (2,3,4)$^+$, *[AGI]* γ_{1081}***364.70*** *7* (†$_\gamma$38 *3*) γ_{943}***502.94*** *9* (†$_\gamma$100 *7*) E2 γ_{384}***1061.95*** *7* (†$_\gamma$83 *9*) γ_{120}***1325.91*** *8* (†$_\gamma$28.7 *25*)

1500.63 *14*, 3$^+$,4$^+$, *[AGI]* γ_{1081}***419.61*** *12* (†$_\gamma$7.7 *23*) γ_{943}***557.85*** *12* (†$_\gamma$32 *9*) γ_{384}***1116.86*** *10* (†$_\gamma$100 *8*) M1 γ_{120}***1380.83*** *12* (†$_\gamma$38 *8*)

1543.94 *12*, 3$^-$, *[ACGI]* γ_{943}***601.16*** *8* (†$_\gamma$100 *7*) E1 γ_{384}***1160.17*** *9* (†$_\gamma$25.1 *17*) γ_{120}***1424.14*** *9* (†$_\gamma$6.9 *6*)

1613.18 *15*, (6$^+$), *[ACG]* γ_{774}***839.03*** *13* (†$_\gamma$100 *7*) γ_{384}***1229.41*** *11* (†$_\gamma$84 *6*)

1620.72 *12*, (4)$^-$, *[ACG]* γ_{1544}***76.78*** *10* (†$_\gamma$1.0 *5*) γ_{1081}***539.70*** *7* (†$_\gamma$100 *7*) E1 γ_{384}***1236.95*** *6* (†$_\gamma$30.9 *22*)

1631.55 *12*, (4$^+$,5$^+$), *[AG]* γ_{1446}***185.84*** *7* (†$_\gamma$36 *7*) γ_{1428}***203.25*** *9* (†$_\gamma$6.4 *8*) γ_{1225}***406.51*** *8* (†$_\gamma$33.7 *23*) γ_{1081}***550.53*** *7* (†$_\gamma$27 *5*) (M1+E2) γ_{774}***857.40*** *8* (†$_\gamma$17.9 *15*) γ_{384}***1247.78*** *6* (†$_\gamma$100 *7*)

1637.7 *2*(?), *[C]* γ_{1407}***230.8*** *2*

1697.98 *16*, 2$^+$, *[AG]* γ_{1501}***197.35*** *15* (†$_\gamma$86 *7*) γ_{384}***1314.21*** *14* (†$_\gamma$48 *10*) γ_{120}***1578.18*** *14* (†$_\gamma$100 *8*) γ_0***1697.97*** *16* (†$_\gamma$82 *7*)

1707.57 *13*, (3,4)$^-$, *[AG]* γ_{1544}***163.63*** *11* (†$_\gamma$7.8 *8*) γ_{1225}***482.53*** *11* (†$_\gamma$4.2 *14*) γ_{1081}***626.56*** *9* (†$_\gamma$100 *7*) E1 γ_{384}***1323.80*** *9* (†$_\gamma$29 *3*)

1718.17 *12*, 5$^-$, *[ACGI]* γ_{1621}***97.44*** *8* (†$_\gamma$3.7 *7*) γ_{1544}***174.23*** *10* (†$_\gamma$2.79 *23*) γ_{1225}***493.12*** *7* (†$_\gamma$100 *7*) E1 γ_{774}***944.02*** *9* (†$_\gamma$47 *4*) γ_{384}***1334.39*** *7* (†$_\gamma$40 *3*)

1832.78 *13*, (6$^-$), *[ACG]* γ_{1718}***114.62*** *9* (†$_\gamma$34.2 *4*) γ_{1621}***212.06*** *7* (†$_\gamma$100 *7*) γ_{1428}***404.49*** *9* (†$_\gamma$20.4 *15*) γ_{774}***1058.64*** *10* (†$_\gamma$3.6 *18*)

1836.29 *13*, 4$^+$,5,6$^+$, *[AGI]* γ_{1225}***611.24*** *9* (†$_\gamma$96 *7*) γ_{774}***1062.14*** *11* (†$_\gamma$53 *11*) γ_{384}***1452.51*** *9* (†$_\gamma$100 *7*)

1840.37 *13*, (4$^+$,5,6$^-$), *[ACG]* γ_{1632}***208.82*** *9* (†$_\gamma$29.8 *22*) γ_{1621}***219.65*** *9* (†$_\gamma$45 *4*) γ_{1446}***394.66*** *9* (†$_\gamma$36 *3*) γ_{1428}***412.08*** *8* (†$_\gamma$52 *4*) γ_{774}***1066.23*** *9* (†$_\gamma$100 *7*)

1871.1 *6*, 10$^+$, *[CDEFH]* γ_{1275}***596.3*** *6* (†$_\gamma$100) E2

1877.60 *17*, 4$^+$,5,6$^+$, *[AGI]* γ_{1501}***376.97*** *15* (†$_\gamma$20.9 *22*) γ_{1428}***449.30*** *15* (†$_\gamma$17.9 *22*) γ_{774}***1103.45*** *15* (†$_\gamma$100 *15*) γ_{384}***1493.83*** *14* (†$_\gamma$57 *5*)

1916.3 *5*, *[C]* γ_{1428}***488.0*** *5* γ_{943}***1042.0*** *5*

1958.2 *3*, (7$^-$), *[C]* γ_{1833}***125.9*** *2* (†$_\gamma$100) γ_{1718}***240.6*** *2* (†$_\gamma$71) γ_{1613}***344.9*** *2* (†$_\gamma$86) γ_{1275}***683.2*** *2* γ_{774}***1184.0*** *5*

1982 *5*(?), 0$^+$, *[I]*

2045.9 *4*, *[C]* γ_{1958}***88.0*** *5*

2191.0 *4*, *[C]* γ_{2046}***145.1*** *2*

2268 *5*(?), 0$^+$, *[I]*

2324.63 *20*, *[A]* γ_{1840}***484.25*** *18* (†$_\gamma$36 *10*) γ_{1836}***488.34*** *16* (†$_\gamma$100 *19*) γ_{1428}***896.33*** *18* (†$_\gamma$39 *5*) γ_{384}***1940.85*** *17* (†$_\gamma$28 *3*)

2366.2 *4*, 9$^+$,10$^+$, 20 *5* ns, *[C]* γ_{2191}***175.3*** *2* (†$_\gamma$100) γ_{1871}***494.9*** *2* (†$_\gamma$33) M1(+E2): δ<0.9 γ_{1275}***1092.0*** *5* (†$_\gamma$67) E2

2399.05 *13*, *[AG]* γ_{1708}***691.47*** *11* (†$_\gamma$72 *5*) γ_{1632}***767.49*** *8* (†$_\gamma$100 *10*) γ_{1621}***778.32*** *9* (†$_\gamma$94 *7*) γ_{1446}***953.33*** *9* (†$_\gamma$66 *7*) γ_{1428}***970.75*** *10* (†$_\gamma$25.3 *24*) γ_{384}***2015.27*** *9* (†$_\gamma$14.7 *18*)

2446.65 *13*, (5$^+$), *[AG]* γ_{1840}***606.27*** *10* (†$_\gamma$11.2 *9*) γ_{1833}***613.86*** *8* (†$_\gamma$29.3 *21*) γ_{1718}***728.48*** *9* (†$_\gamma$4.2 *6*) γ_{1632}***815.09*** *8* (†$_\gamma$16.1 *13*) (M1) γ_{1621}***825.92*** *8* (†$_\gamma$28.2 *22*) γ_{774}***1672.49*** *9* (†$_\gamma$82 *6*) (E2) γ_{384}***2062.87*** *8* (†$_\gamma$100 *9*) (E2)

2547.0 *8*, 12$^+$, *[FH]* γ_{1871}***675.8*** *6* (†$_\gamma$100) E2

2609.2 *5*, (10,11)$^+$, *[C]* γ_{2366}***243*** *1*

2719.88 *20*, 4$^+$,5,6$^+$, *[A]* γ_{1833}***887.09*** *18* (†$_\gamma$100 *9*) γ_{1718}***1001.71*** *18* (†$_\gamma$72 *7*) γ_{1428}***1291.58*** *18* (†$_\gamma$63 *5*) γ_{774}***1945.73*** *18* (†$_\gamma$84 *7*) γ_{384}***2336.10*** *18* (†$_\gamma$30 *5*)

2862.4 *4*, (11,12)$^+$, *[C]* γ_{2609}***253.1*** *2* γ_{2366}***496.2*** *2*

3129.7 *5*, (12,13)$^+$, *[C]* γ_{2862}***267.3*** *2* γ_{2609}***520.5*** *2*

3259.9 *9*, 14$^+$, *[FH]* γ_{2547}***712.9*** *5* (†$_\gamma$100) E2

3357.9 *10*, 14$^+$, *[H]* γ_{2547}***810.9*** *5* (†$_\gamma$100) E2

3788.8 *10*, 16$^+$, *[FH]* γ_{3358}***430.9*** *5* (†$_\gamma$79 *21*) E2 γ_{3260}***528.9*** *5* (†$_\gamma$100 *21*) E2

4044.2 *10*, (16)$^+$, *[H]* γ_{3358}***686.3*** *5* (†$_\gamma$66 *34*) E2 γ_{3260}***784.3*** *5* (†$_\gamma$100 *34*) E2

4346.4 *12*, 18$^+$, *[H]* γ_{3789}***557.6*** *7* (†$_\gamma$100) E2

4797.8 *12*, (18)$^+$, *[H]* γ_{4044}***753.6*** *7* (†$_\gamma$100) E2

4997.9 *14*, 20$^+$, *[H]* γ_{4346}***651.5*** *7* (†$_\gamma$100) E2

5737.9 *15*, 22$^+$, *[H]* γ_{4998}***740.0*** *7* (†$_\gamma$100) E2

$^{184}_{77}$Ir

Δ: –39700 *300* **S$_n$:** (7500) **S$_p$:** (3300) **Q$_{EC}$:** 4600 *300* **Q$_\alpha$:** 3700 *300*

Populating Reactions and Decay Modes

A ^{184}Pt EC decay (17.3 m) (70FiZZ, 87BrZR, 88Be16)
B (HI,xnγ) (63Gr08, 63Ka17, 78El11, 79Ha10)

Levels and γ-ray branchings:

0, 5$^-$, 3.09 *3* h, *[AB]*, %EC+%β$^+$=100, μ=0.696 *5*, Q=+2.1 *3*

11.6 *3*(?), *[A]* γ_0***11.6*** *3*(?) (†$_\gamma$100)

18.4 *3*(?), (3$^-$,4$^-$,5$^-$), *[A]* γ_0***18.4*** *3*(?)

41.80 *24*, (6)$^-$, *[B]* γ_0***41.80*** *24* (†$_\gamma$100) M1

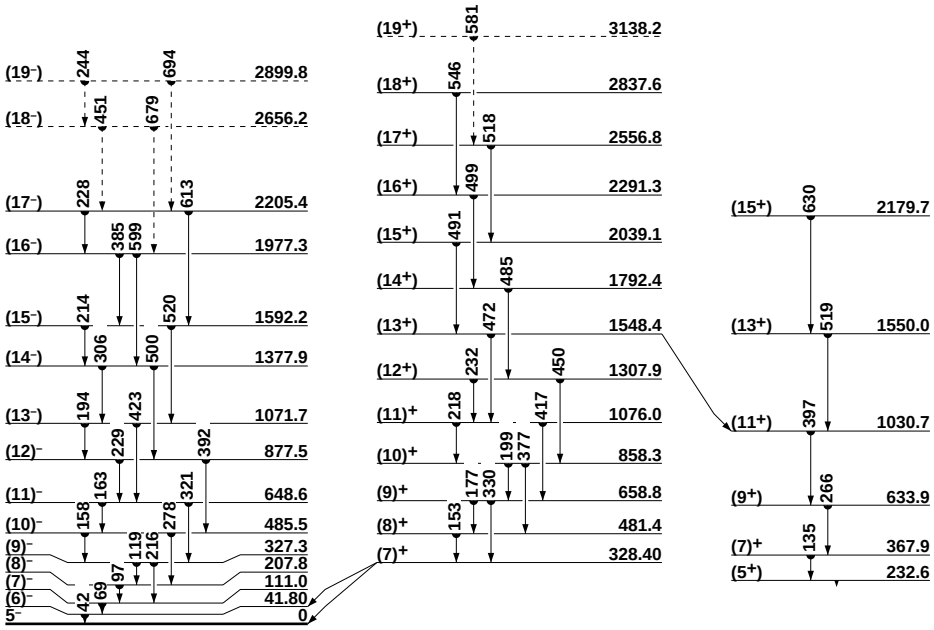

GS band

$^{184}_{77}$Ir