$^{238}_{92}U$

%: 99.2745 *60*
Δ: 47303.7 *20* **S_n:** 6153.7 *12* **S_p:** 7620 *100*
Q_α: 4270 *3*
σ^0_γ: 2.680 *19* b , **σ_f:** 0.004 mb , **σ_α:** 0.0013 *6* mb

Nuclear Bands

- *A* GS band
- *B* Fission isomer band
- *C* Fission isomer
- *D* Octupole band
- *E* Band Structure
- *F* β band
- *G* γ band
- *H* Band Structure
- *I* Band Structure
- *J* ν1/2[631]+ν5/2[622]
- *K* Band Structure

Levels and γ-ray branchings:

0, 0^+, 4.468×10^9 *3* y, %SF=5.38×10^{-5} *11*, %α=100, Q=13.9 *20*

A **44.91** *3*, 2^+, 203 *7* ps **γ_0*44.915*** *13* (†$_\gamma$100) E2

A **148.41** *5*, 4^+ **γ_{45}*103.50*** *4* (†$_\gamma$100)

A **307.21** *10*, 6^+ **γ_{148}*158.80*** *8* (†$_\gamma$100)

A **518.3** *3*, 8^+, 23 *3* ps **γ_{307}*211.2*** *3* (†$_\gamma$100)

D **680.1** *2*, 1^- **γ_{45}*635.18*** *3* (†$_\gamma$100 *2*) **γ_0*680.1*** *3* (†$_\gamma$74 *4*)

D **731.9** *2*, 3^- **γ_{148}*583.55*** *3* (†$_\gamma$83 *2*) **γ_{45}*686.99*** *3* (†$_\gamma$100 *2*)

A **775.7** *4*, 10^+, 9.0 *9* ps **γ_{518}*257.8*** *4* (†$_\gamma$100)

D **826.7** *5*, 5^- **γ_{307}*519.44*** *8* (†$_\gamma$57 *4*) **γ_{148}*678.4*** *6* (†$_\gamma$100 *6*)

E **925.7** *3*, (0^+) **γ_{45}*880.8*** *2* (†$_\gamma$100)

H **930.8** *3*, (1^-) **γ_{680}*251.3*** *10* (†$_\gamma$11 *3*) **γ_{45}*886.2*** *4* (†$_\gamma$100 *4*) **γ_0*931.5*** *6* (†$_\gamma$27 *2*)

H **950.2** *4*, (2^-) **γ_{732}*218.0*** *3* (†$_\gamma$43 *5*) **γ_{680}*270.1*** *4* (†$_\gamma$37 *6*) **γ_{45}*905.6*** *6* (†$_\gamma$100 *6*)

D **966.3** *5*, 7^- **γ_{518}*448.4*** *9* **γ_{307}*659.1*** *2*

E **967.3** *3*, 2^+, 0.6 *4* ps **γ_{732}*234.5*** *10* (†$_\gamma$16 *2*) **γ_{680}*286.4*** *10* (†$_\gamma$14 *1*) **γ_{148}*818.4*** *4* (†$_\gamma$100 *5*) **γ_{45}*922.3*** *2* (†$_\gamma$59 *3*) E2+M1+E0 **γ_0*967.3*** *2* (†$_\gamma$18 *1*)

F **993** (?), (0^+)

H **997.5** *3*, 3^- **γ_{827}*171*** (†$_\gamma$<1.5) **γ_{680}*318.0*** *10* (†$_\gamma$7.6 *3*) **γ_{148}*849.1*** *4* (†$_\gamma$100 *3*) **γ_{45}*952.70*** *7* (†$_\gamma$61 *3*)

F **1037.3** *2*, 2^+, 0.67 *15* ps **γ_{732}*305.5*** *6* (†$_\gamma$10.5 *4*) **γ_{680}*357.7*** *4* (†$_\gamma$9.0 *4*) **γ_{148}*888.9*** *3* (†$_\gamma$76.5 *15*) **γ_{45}*993.0*** *10* (†$_\gamma$73.8 *15*) E2+M1+E0 **γ_0*1037.4*** *2* (†$_\gamma$100 *3*)

E **1056.6** *3*, (4^+) **γ_{307}*749.3*** *3* (†$_\gamma$100)

J **1059.5**, (3^+) **γ_{148}*911.1*** (†$_\gamma$43) **γ_{45}*1014.6*** (†$_\gamma$100)

G **1060.3** *2*, 2^+, 0.66 *5* ps **γ_{148}*911.9*** *4* (†$_\gamma$3.3 *2*) **γ_{45}*1015.3*** *2* (†$_\gamma$100 *2*) **γ_0*1060.3*** *2* (†$_\gamma$68.4 *13*)

A **1076.5** *5*, 12^+, 4.2 *6* ps **γ_{776}*300.6*** *9* (†$_\gamma$100)

G **1105.7**, (3^+) **γ_{148}*957.33*** *6* (†$_\gamma$100) **γ_{45}*1060.98*** *3*

I **1112.6** *2*, (1^-) **γ_{680}*432.5*** *3* **γ_0*1112.7*** *3*

F **1127.0** *3*, (4^+) **γ_{827}*300.6*** *10* (†$_\gamma$57 *48*) **γ_{148}*978.5*** *3* (†$_\gamma$<100)

I **1128.7** *3*, (2^-) **γ_{931}*198.6*** *3* (†$_\gamma$≈12) **γ_{732}*396.4*** *3* (†$_\gamma$25.5 *14*) **γ_{680}*448.3*** *4* (†$_\gamma$100 *4*) **γ_{45}*1084.0*** *4* (†$_\gamma$<80)

1135.8 *2* **γ_{307}*828.3*** *6* (†$_\gamma$25 *8*) **γ_{45}*1090.9*** *2* (†$_\gamma$100 *8*)

D **1150.3** *6*, 9^- **γ_{776}*374.8*** *4* **γ_{518}*632.6*** *4*

G **1168.0** *2*, (4^+) **γ_{148}*1019.61*** *8* (†$_\gamma$100 *7*) **γ_{45}*1123.1*** *2* (†$_\gamma$40 *4*)

I **1170.4** *3*, 3^- **γ_{967}*203.4*** *10* **γ_{680}*490.3*** *2* **γ_{148}*1021*** *1* **γ_{45}*1123*** *1*

1224.2 *3*, (2^+), 2.3 *14* ps **$\gamma_{1060.3}$*163.9*** *5* (†$_\gamma$17.4 *15*) **γ_{950}*274.0*** *10* (†$_\gamma$<11) **γ_{45}*1179.4*** *2* (†$_\gamma$93 *4*) **γ_0*1223.7*** *4* (†$_\gamma$100 *4*)

1231

I **1232.6** *5*, (4^-) **γ_{950}*282.2*** *6* (†$_\gamma$100 *43*) **γ_{827}*405.8*** *10* (†$_\gamma$57 *28*) **γ_{732}*501*** *1* (†$_\gamma$100 *30*) **γ_{148}*1084.2***

1260.9 *2* **γ_{1037}*223.4*** *4* (†$_\gamma$100 *24*) **γ_{148}*1112.7*** *3* (†$_\gamma$<41) **γ_{45}*1215.9*** *2* (†$_\gamma$65 *6*) **γ_0*1262*** *1* (†$_\gamma$12 *6*)

F **1269.2** *10*, (6^+) **γ_{307}*962.0*** *10* (†$_\gamma$100)

1278.5 *3*, $(1^-,2^+)$ **γ_{732}*547.0*** *3* (†$_\gamma$80 *20*) **γ_{45}*1233.8*** *3* (†$_\gamma$80 *20*) **γ_0*1278.8*** *2* (†$_\gamma$100 *10*)

I **1285.8** *3*, (5^-) **γ_{998}*287.9*** *4* (†$_\gamma$<100) **γ_{307}*978.5*** *3* (†$_\gamma$<63) **γ_{148}*1138.0*** *10* (†$_\gamma$27 *9*)

1355.2 *3*, $(1,2^+)$ **γ_{45}*1310.5*** *4* (†$_\gamma$100 *20*) **γ_0*1354.5*** *10* (†$_\gamma$60 *20*)

1375

D **1378.4** *6*, 11^- **γ_{1150}*228.1*** *4* **γ_{1077}*302.3*** **γ_{776}*602.9*** *4*

I **1381.7** *3*, (6^-) **γ_{827}*555.3*** *5* (†$_\gamma$71 *28*) **γ_{307}*1074.4*** *2* (†$_\gamma$100 *14*)

1413.3 *2*, $(2^+,3^-)$ **γ_{1113}*300.6*** *10* **$\gamma_{1060.3}$*352.3*** *1* (†$_\gamma$100 *8*) **γ_{931}*482.9*** *3* (†$_\gamma$28 *8*) **γ_{148}*1265.6*** *10* (†$_\gamma$12 *4*) **γ_{45}*1368.3*** *2*

A **1415.3** *6*, 14^+, 2.6 *2* ps **γ_{1077}*338.8*** *4*

($\dagger_\gamma$100)

K **1482.0** *2*, (0^+) γ_{1113}***369.5*** *2* ($\dagger_\gamma$100 *15*) γ_{1037}***443.8*** *10* ($\dagger_\gamma$38 *16*) γ_{931}***552.5*** *10* ($\dagger_\gamma$38 *16*) γ_{45}***1437.1*** *2* ($\dagger_\gamma$100 *15*)

1516.5 *2*, (4^+) γ_{950}***566.1*** *3* γ_{307}***1209.3*** *3* γ_{148}***1368.3*** *2* γ_{45}***1470*** *1*

K **1530.7** *2*, 2^+ γ_{1129}***401.6*** *3* ($\dagger_\gamma$91 *18*) γ_{732}***798.9*** *2* ($\dagger_\gamma$100 *10*) γ_{148}***1381.8*** *5* ($\dagger_\gamma$36 *9*) γ_{45}***1485*** *1* ($\dagger_\gamma$18 *9*) γ_0***1531.6*** *10* ($\dagger_\gamma$18 *9*)

1594.9 *2*, (2^+,3,4^+) γ_{827}***768.3*** γ_{732}***863.5*** *6* ($\dagger_\gamma$<37) γ_{148}***1446.2*** *3* ($\dagger_\gamma$100 *13*) γ_{45}***1550.0*** *4* ($\dagger_\gamma$75 *13*)

1630

K **1643.2** *3*, 4^+ γ_{1355}***287.9*** *4* ($\dagger_\gamma$<100) γ_{827}***816.6*** γ_{307}***1336.2*** *3* ($\dagger_\gamma$54 *9*) γ_{148}***1495*** *1* ($\dagger_\gamma$36 *12*) γ_{45}***1598.2*** *4* ($\dagger_\gamma$46 *13*)

D **1648.9** *8*, 13^- γ_{1378}***270.5*** *4* γ_{1077}***572.4*** *4*

1665

1672.0 *2* γ_{1106}***566.1*** *3* ($\dagger_\gamma$<100) γ_{148}***1523.7*** *3* ($\dagger_\gamma$56 *11*) γ_{45}***1627.3*** *6* ($\dagger_\gamma$33 *11*)

1712

1761.2 *4*, (4^+) γ_{1224}***536.8*** *4* ($\dagger_\gamma$46 *18*) γ_{1136}***625.2*** *2* ($\dagger_\gamma$100 *20*) γ_{1106}***655*** *1* ($\dagger_\gamma$46 *18*) γ_{307}***1454*** *1* ($\dagger_\gamma$27 *9*) γ_{45}***1716.7*** *6* ($\dagger_\gamma$36 *9*)

1774.7, (3^-,4,5^-) γ_{1168}***606.6*** *2* ($\dagger_\gamma$100 *12*) γ_{1127}***647.7*** *4* ($\dagger_\gamma$24 *8*) γ_{966}***808.4*** *1* ($\dagger_\gamma$56 *8*) γ_{732}***1043*** *1* ($\dagger_\gamma$4 *4*) γ_{148}***1627.3*** *6* ($\dagger_\gamma$12 *3*)

A **1788.2** *8*, 16^+, 1.66 *7* ps γ_{1415}***372.9*** *4* ($\dagger_\gamma$100)

K **1814.3** *3*, (6^+) γ_{1382}***432.5*** *3* ($\dagger_\gamma$<100) γ_{518}***1296*** *1* ($\dagger_\gamma$37 *12*) γ_{307}***1507.1*** *3* ($\dagger_\gamma$100 *12*)

1892.2 *2*, (4^+,5^-) γ_{1643}***248.6*** *7* ($\dagger_\gamma$90 *40*) γ_{732}***1160.4*** *2* ($\dagger_\gamma$100 *10*) γ_{307}***1584.9*** *3* ($\dagger_\gamma$70 *10*)

D **1958.6** *8*, 15^- γ_{1649}***309.9*** *4* γ_{1415}***543.7*** *4*

1992.6 *3*, (3^-) γ_{1286}***706.6*** *2* ($\dagger_\gamma$100 *13*) γ_{1224}***768.3*** *2* ($\dagger_\gamma$<69) γ_{1129}***863.5*** *6* ($\dagger_\gamma$<19) $\gamma_{1059.5}$***932.7*** *3* ($\dagger_\gamma$50 *6*) γ_{148}***1844.6*** *5* ($\dagger_\gamma$25 *6*)

2163.6 *3* γ_{732}***1431.3*** *10* ($\dagger_\gamma$67 *15*) γ_{307}***1856.6*** *4* ($\dagger_\gamma$100 *15*) γ_{148}***2014.8*** *4* ($\dagger_\gamma$84 *15*)

A **2190.7** *13*, 18^+, 1.18 *7* ps γ_{1788}***402.6*** *4* ($\dagger_\gamma$100)

D **2305.9** *10*, 17^- γ_{1959}***347.5*** *4* γ_{1788}***518.3*** *4*

B **2557.6** *5*, 0^+, 298 *18* ns, %IT≈95, %SF≈5 γ_{680}***1879*** ($\dagger_\gamma$≈37) γ_{45}***2512.7*** *5* ($\dagger_\gamma$≈100) γ_0***2558*** *2* ($\dagger_e$≈0.8) E0

B **2577.2**, (2^+) γ_{2558}***19.6***

C **2557.6+y** (?), >1 ns, %SF≤100

A **2618.7** *16*, 20^+, 0.90 *7* ps γ_{2191}***427.9*** *4* ($\dagger_\gamma$100)

D **2687.2** *14*, 19^- γ_{2306}***382.7*** *4* γ_{2191}***498.3***

2754, (1), Γ=8.4×10^{-5} eV γ_{45}***2709*** ($\dagger_\gamma$20 *10*) γ_0***2754*** ($\dagger_\gamma$100)

A **3067.2** *20*, 22^+, 0.69 *14* ps γ_{2619}***448.9*** *4* ($\dagger_\gamma$100)

D **3104.2** *14*, 21^- γ_{2687}***415.1*** *10*

3202.8 *10* (?), (2^+) γ_{2558}***645.2*** *9* (E0)

3253.4, 1^-, Γ=5.2×10^{-4} *19* eV γ_{1129}***2125*** ($\dagger_\gamma$44) γ_{1037}***2217*** ($\dagger_\gamma$9) γ_{998}***2256*** ($\dagger_\gamma$8) γ_{967}***2288*** ($\dagger_\gamma$91) γ_{950}***2303*** ($\dagger_\gamma$16) γ_{931}***2323*** ($\dagger_\gamma$32) γ_{926}***2327*** ($\dagger_\gamma$33) γ_{732}***2522*** ($\dagger_\gamma$14) γ_{680}***2574*** ($\dagger_\gamma$28) γ_{45}***3209*** ($\dagger_\gamma$22) γ_0***3253*** ($\dagger_\gamma$100)

A **3534.5** *15*, 24^+, 0.51 *4* ps γ_{3067}***467*** *1* ($\dagger_\gamma$100)

D **3547.8** *18*, 23^- γ_{3104}***443.6*** *10*

3809, (1,2), Γ>1.6×10^{-3} eV γ_{926}***2882*** ($\dagger_\gamma$55 *22*) γ_{680}***3128*** ($\dagger_\gamma$28 *22*) γ_{45}***3764*** ($\dagger_\gamma$96 *14*) γ_0***3809*** ($\dagger_\gamma$100)

A **4017.3** *18*, 26^+, 0.40 *6* ps γ_{3535}***482.8*** *10* ($\dagger_\gamma$100)

4494, (1,2), Γ>4.7×10^{-5} eV γ_{45}***4450*** ($\dagger_\gamma$32 *28*) γ_0***4495*** ($\dagger_\gamma$100)

A **4516.5** *21*, 28^+, 0.37 *9* ps γ_{4017}***499.3*** *10* ($\dagger_\gamma$100)

4592, (1,2), Γ>2.8×10^{-4} eV γ_{45}***4546*** ($\dagger_\gamma$190) γ_0***4592*** ($\dagger_\gamma$100)

4806.6, (1), Γ=2.5×10^{-4} *5* eV γ_{967}***3840*** ($\dagger_\gamma$47 *17*) γ_0***4807*** ($\dagger_\gamma$100)

A **5034.3** *23*, 30^+ γ_{4517}***517.7*** *10*

5206, (1,2), Γ>4.1×10^{-4} eV $\gamma_{1059.5}$***4148*** ($\dagger_\gamma$33 *26*) γ_{45}***5160*** ($\dagger_\gamma$90 *28*) γ_0***5206*** ($\dagger_\gamma$100)

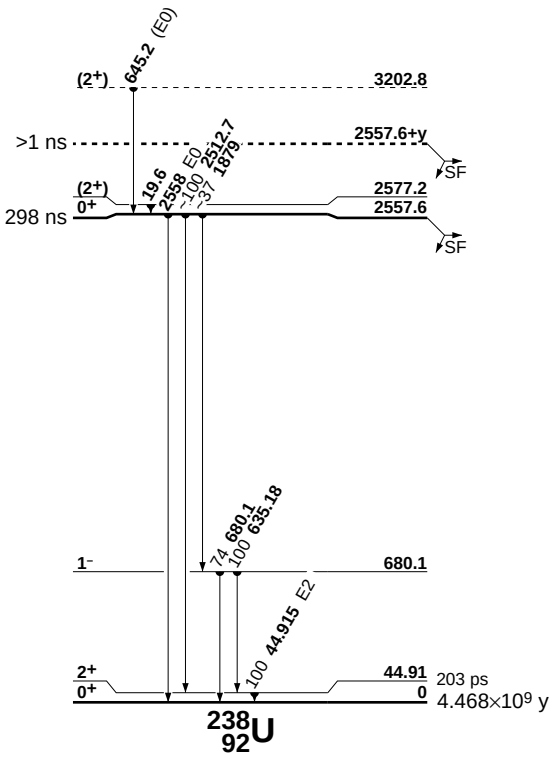
645.2 (E0)
(2+)
3202.8
>1 ns
2557.6+y
SF
19.6
2558
E0
~100
2512.7
~37
1878
(2+)
2577.2
0+
2557.6
298 ns
SF
74
680.1
100
635.18
1-
680.1
100
44.915
E2
2+
44.91
203 ps
0+
0
4.468×10^9 y
238
92
U